GreenPark
a mapletree property
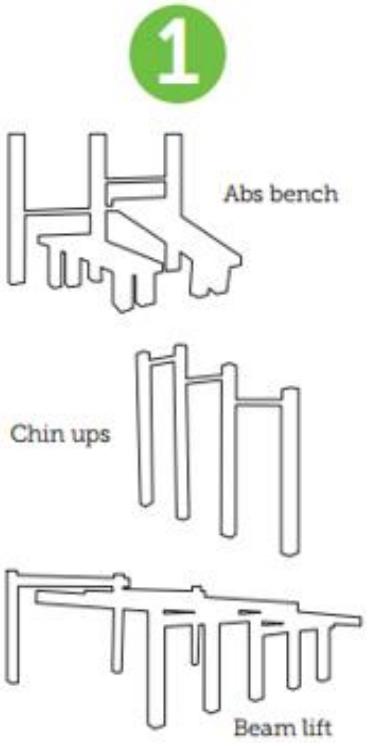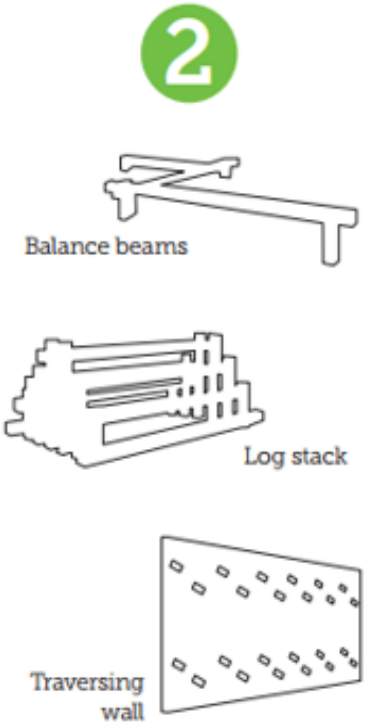
Trim Trail